# HAMMER STRENGTH
# MTSLC
# LEG CURL

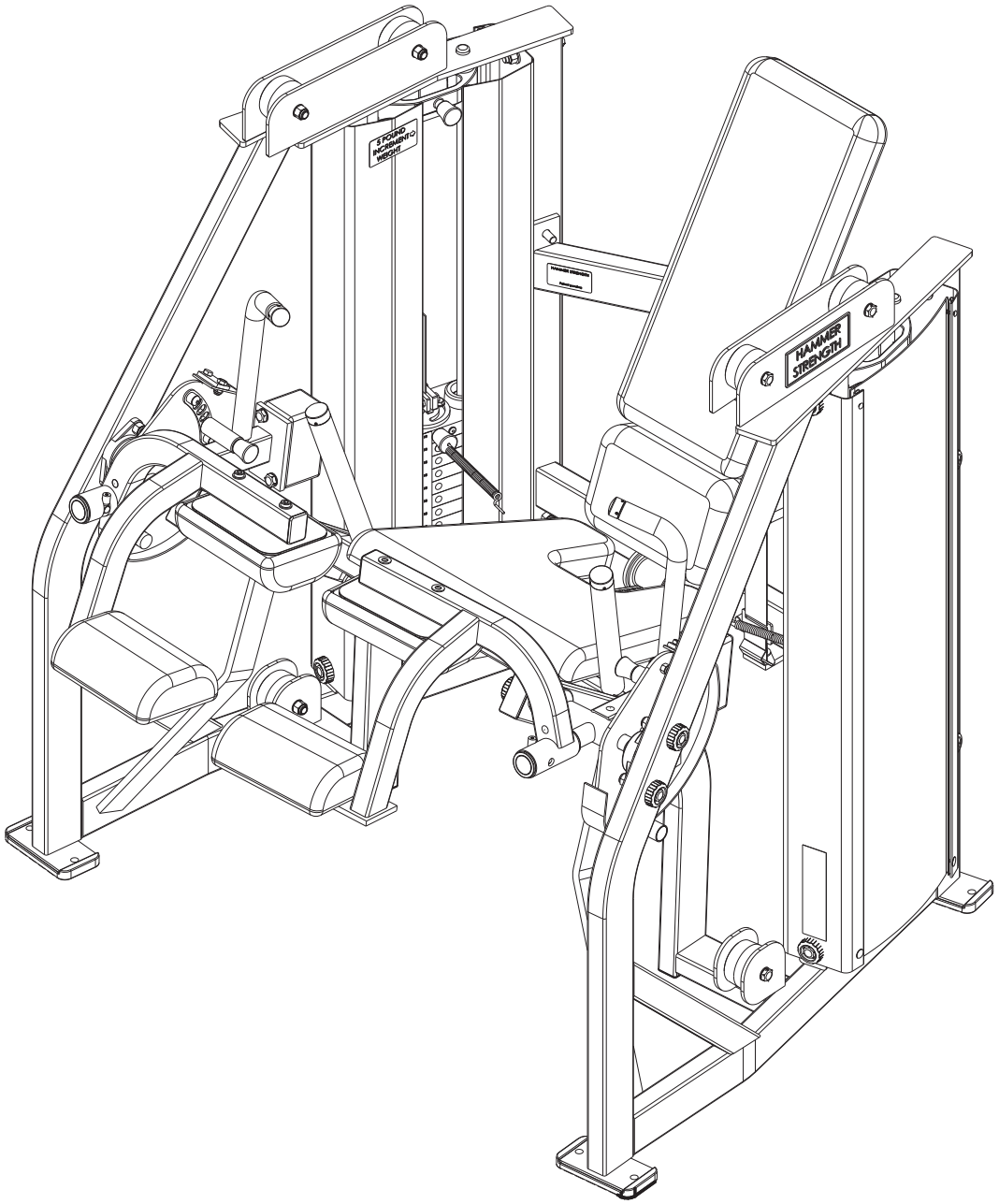


Customer Support Services

PARTS LIST

# MTSLC LEG CURL
## Contents


| | |
|---|---|
| COMPONANT ASSEMBLY | pg.3 |
| COMPONANT ASSEMBLY II | 4 |
| COMPONANT ASSEMBLY LEGEND | 5 |
| RIGHT SIDE ASSEMBLY | 6 |
| RIGHT SIDE ASSEMBLY II | 7 |
| RIGHT SIDE ASSEMBLY LEGEND | 8 |
| RIGHT WORK ARM ASSEMBLY | 9 |
| RIGHT REAR ARM ASSEMBLY | 10 |
| RIGHT CAM ASSEMBLY | 11 |
| REAR FRAME ASSEMBLY | 12 |
| SEAT FRAME ASSEMBLY | 13 |
| SEAT FRAME ASSEMBLY LEGEND | 14 |
| SEAT BACK ASSEMBLY | 15 |
| LEFT SIDE ASSEMBLY | 16 |
| LEFT SIDE ASSEMBLY II | 17 |
| LEFT SIDE ASSEMBLY LEGEND | 18 |
| LEFT WORK ARM ASSEMBLY | 19 |
| LEFT REAR ARM ASSEMBLY | 20 |
| LEFT CAM ASSEMBLY | 21 |
| 150 LBS. WEIGHT STACK ASSEMBLY | 22 |
| INCREMENT WEIGHT ASSEMBLY | 23 |
| IMAGE | 24 |

# MTSLC LEG CURL
# COMPONENT ASSEMBLY

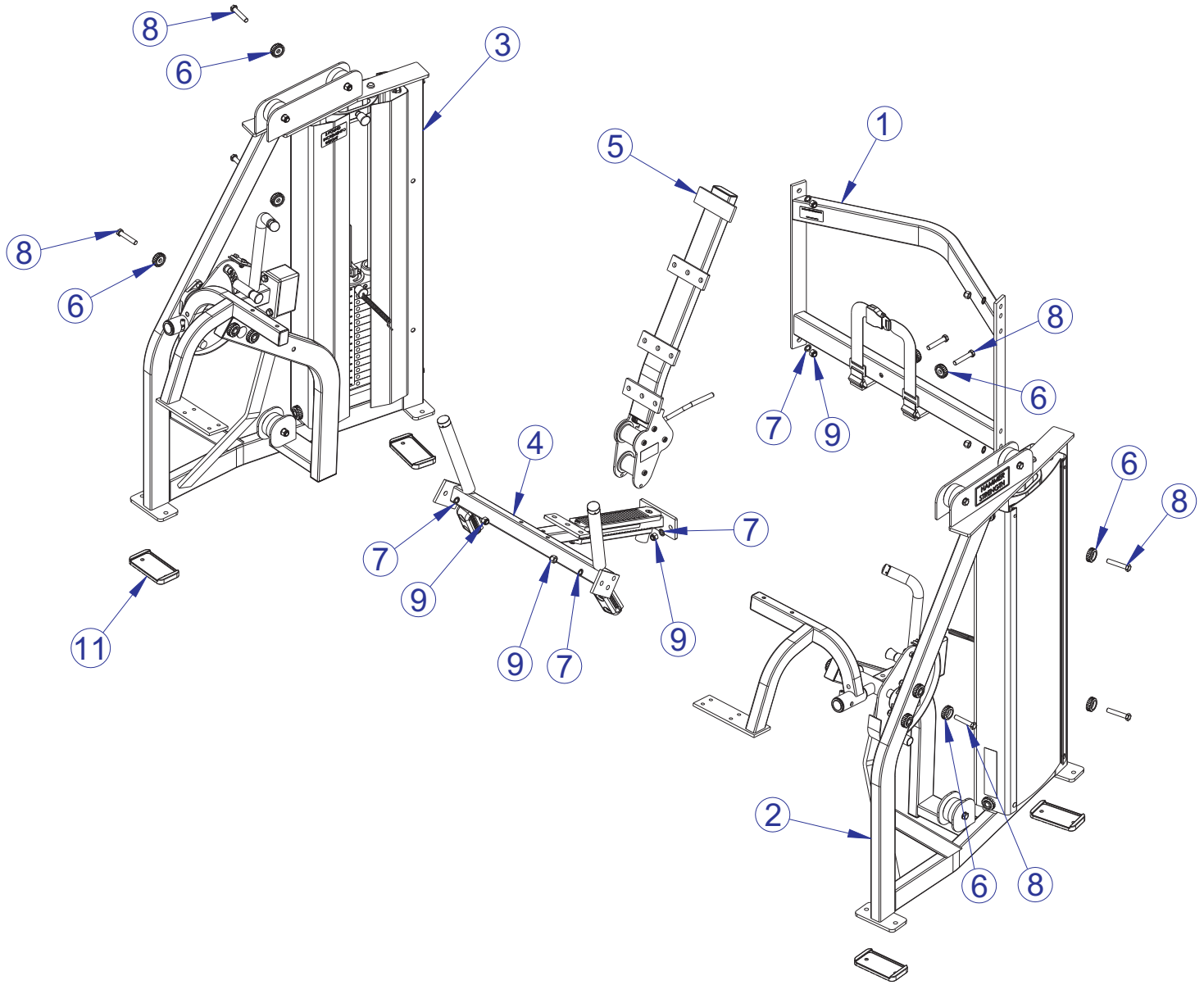


SEE PAGE 5 FOR LEGEND

# MTSLC LEG CURL
# COMPONENT ASSEMBLY II

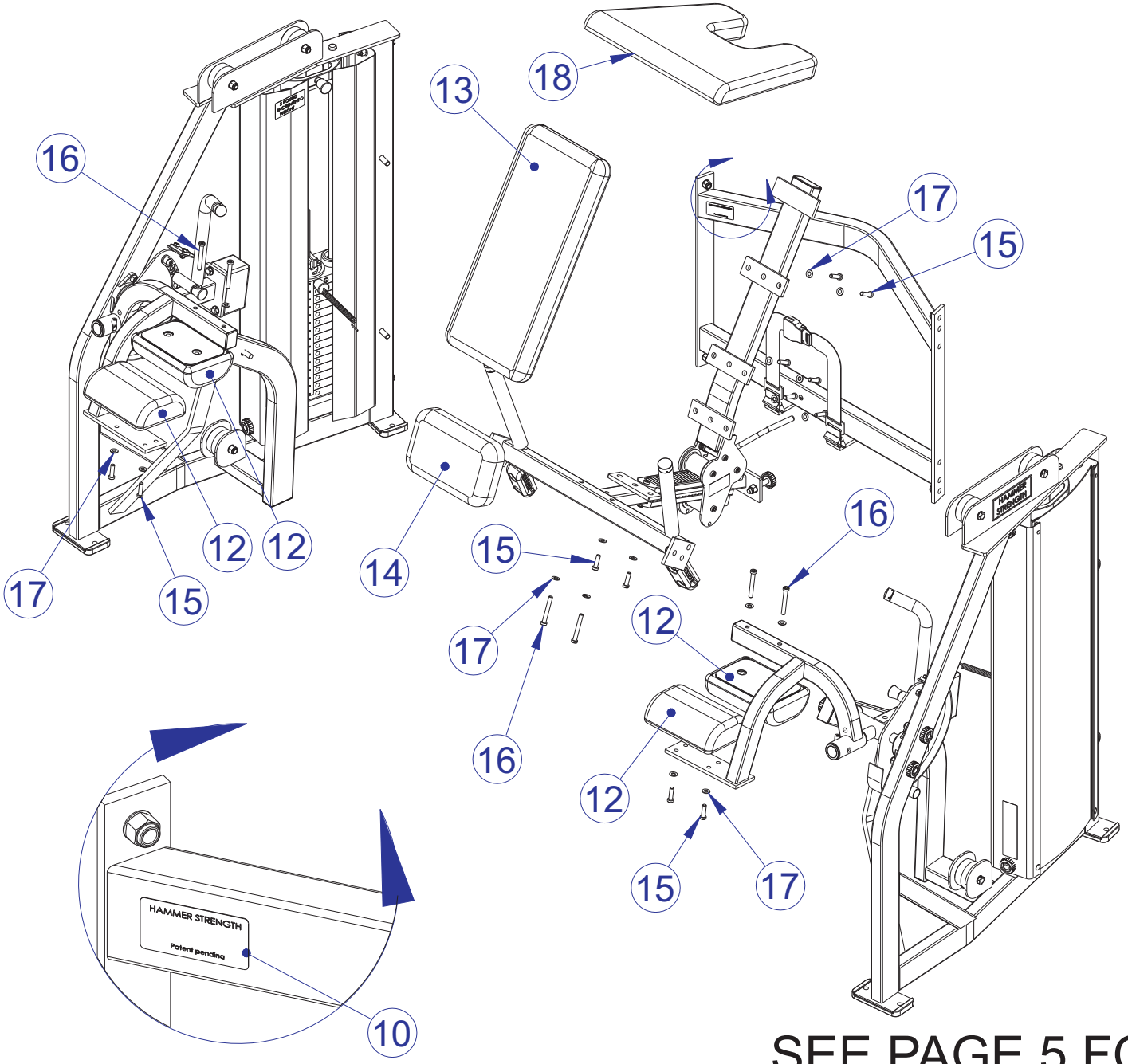


SEE PAGE 5 FOR LEGEND

# MTSLC LEG CURL
# COMPONENT ASSEMBLY LEGEND

| ITEM NO. | QTY. | PART NO. | DESCRIPTION |
|---|---|---|---|
| 1 | 1 | 7593901 | ASSY, MTLC, REAR FRAME |
| 2 | 1 | 7538201 | ASSY, MTLC, LEFT SIDE |
| 3 | 1 | 7538301 | ASSY, MTLC, RIGHT SIDE |
| 4 | 1 | 7538401 | ASSY, MTLC, SEAT FRAME |
| 5 | 1 | 7522701 | ASSY, MTLE, SEAT BACK |
| 6 | 8 | 7434001 | WASHER, MTS, HAMMER HEAD |
| 7 | 8 | 3239505 | WSH, .500 IN-D ST ZN |
| 8 | 8 | 3239311 | 1/2-13 X 2.75 UNS HEX FHB G5 ZN |
| 9 | 8 | 3102801 | NUT, NYLOCK 1/2-13 ST ZN |
| 10 | 1 | M051-00299-A000 | HAMMER PATENT DECAL |
| 11 | 4 | 7388201 | Footpad, PS Rubber |
| 12 | 4 | 7499601 | PAD, 9 X 6-1/2 |
| 13 | 1 | 7398801 | PAD, BACK 25 X 11-1/4 |
| 14 | 1 | 7399300 | PAD. 7 X 11-1/4 |
| 15 | 12 | 3236204 | SCREW, M10 X1.5 35MM |
| 16 | 6 | 3236212 | SCREW, M10 X1.5 75MM |
| 17 | 18 | 3236601 | WASHER, 3/8 SAE SS |
| 18 | 1 | 7459101 | PAD, SEAT 18-1/2 X 19-7/8 |

# MTSLC LEG CURL
# RIGHT SIDE ASSEMBLY - 7538301

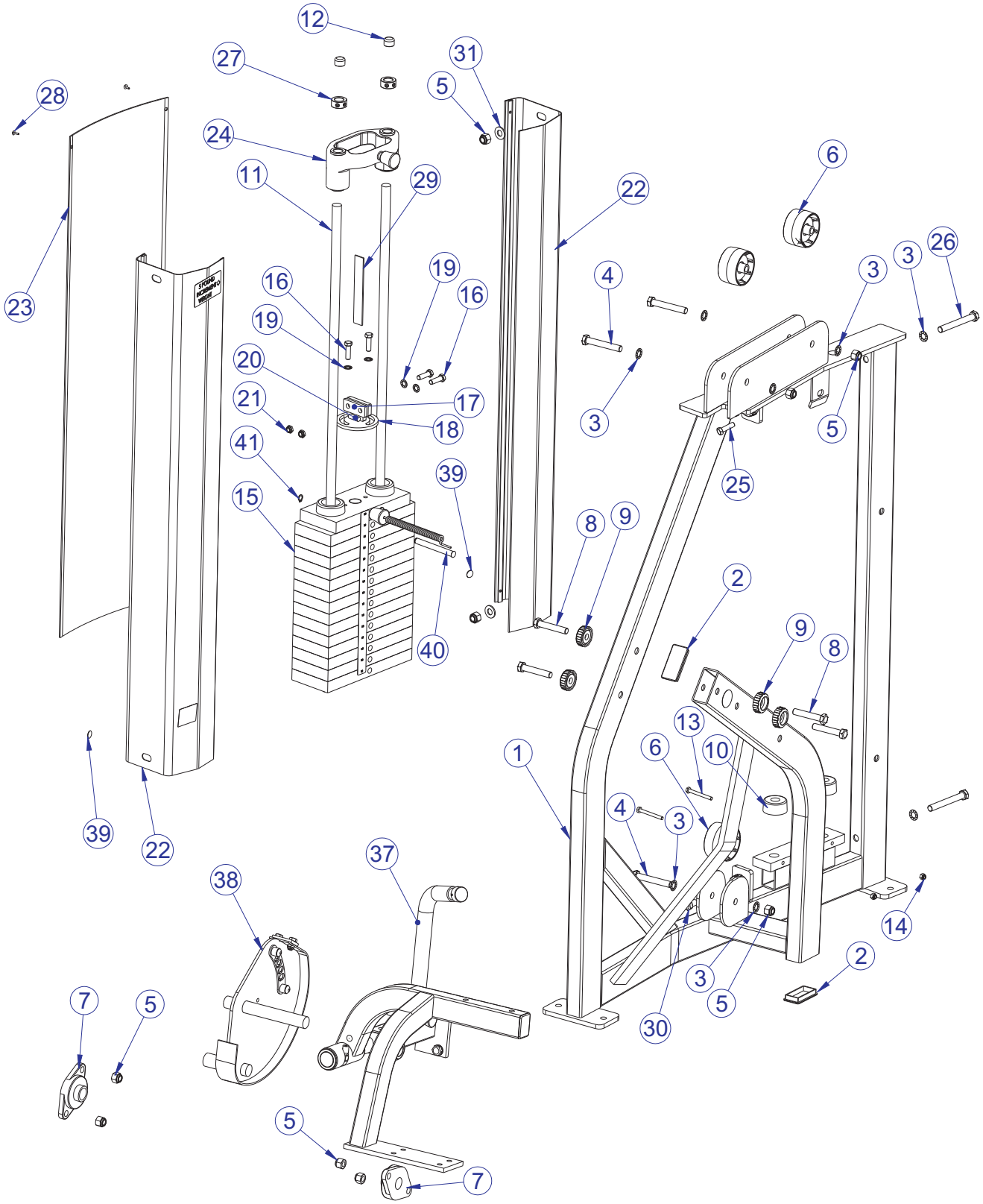


SEE PAGE 8 FOR LEGEND

# MTSLC LEG CURL
# RIGHT SIDE ASSEMBLY II - 7538301

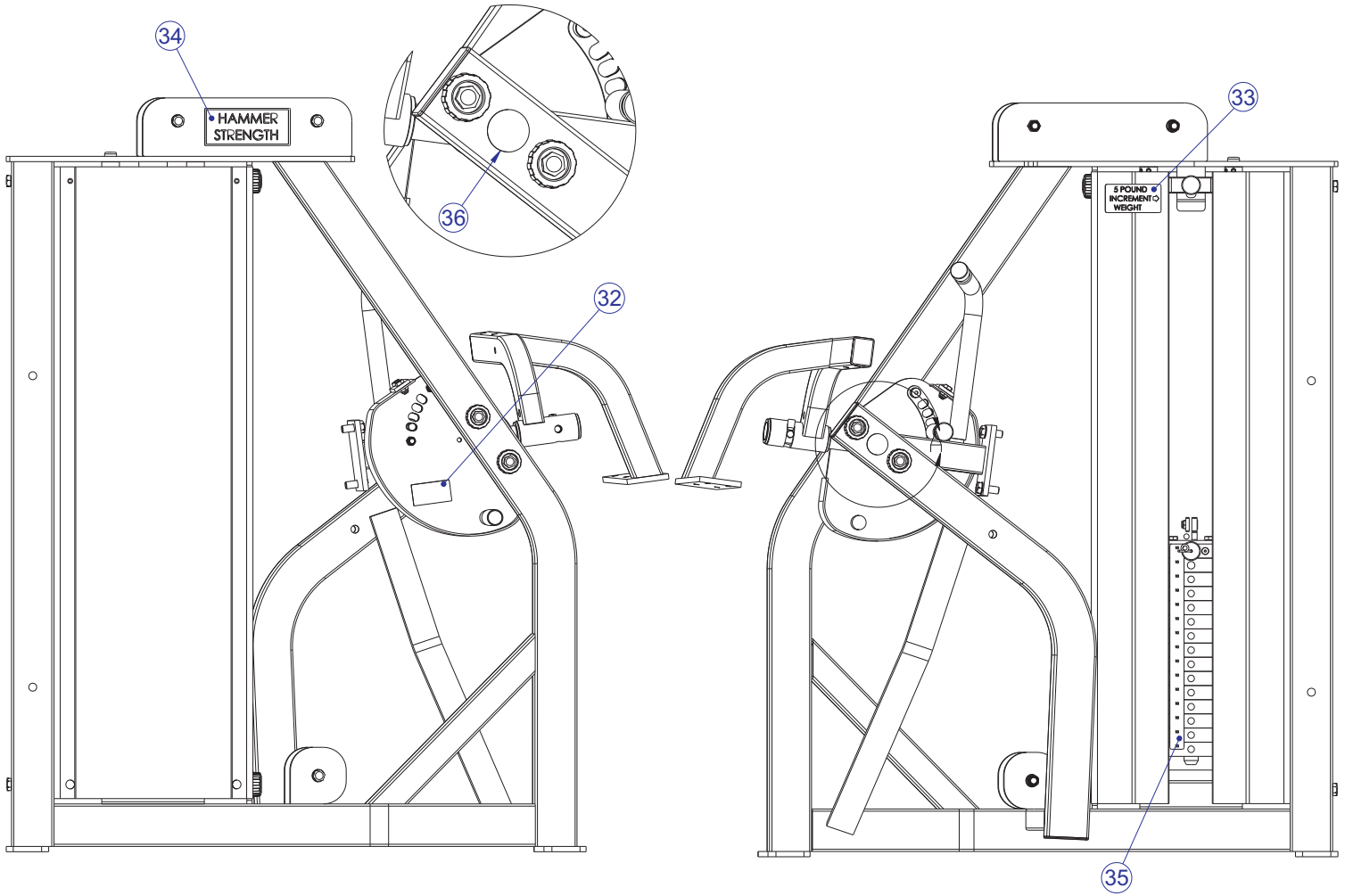


SEE PAGE 8 FOR LEGEND

# MTSLC LEG CURL
# RIGHT SIDE ASSEMBLY LEGEND

| ITEM NO. | QTY. | PART NO. | DESCRIPTION |
|---|---|---|---|
| 1 | 1 | 7536301 | WLDMT, MTLC, RIGHT SIDE |
| 2 | 2 | 7477401 | CAP. END, 1-1/2 X 3, 11GA SGRY |
| 3 | 8 | 3239505 | WSH, .500 IN-D ST ZN |
| 4 | 3 | 3239313 | 1/2-13 X 3.25 UNS HEX FHB G5 ZN |
| 5 | 9 | 3102801 | NUT, NYLOCK 1/2-13 ST ZN |
| 6 | 3 | 7594601 | PULLEY, MTS, 3" BELT |
| 7 | 2 | 3239901 | BEARING, 2 HOLE FLANGE, 1" ID |
| 8 | 4 | 3239311 | 1/2-13 X 2.75 UNS HEX FHB G5 ZN |
| 9 | 6 | 7434001 | WASHER, MTS, HAMMER HEAD |
| 10 | 2 | 7352101 | CUSHION, WEIGHT STACK |
| 11 | 2 | 7328613 | GUIDE ROD, .75 OD SOLID 43.25 |
| 12 | 2 | 3242701 | CAP, END, .75 X .50. RD, BLACK |
| 13 | 2 | 3223809 | 1/4-20 UNS HEX FHB G5 ZN |
| 14 | 2 | 3102806 | NUT, NYLOCK 1/4-20 ZN |
| 15 | 1 | 7464701 | ASSY, MTS, 150 LB STACK |
| 16 | 4 | 3223302 | 3/8-16 X 1.25 HEX HEAD BOLT |
| 17 | 1 | 7435295 | PLATE, MTS, BELT CLAMP |
| 18 | 1 | 7436595 | WLDMT, MTS, BELT ATTACH LH |
| 19 | 4 | 3239503 | WSH, .375 IN-D ST ZN |
| 20 | 1 | 7435101 | SHAFT, 3/8" DIA SS, BELT WRAP |
| 21 | 2 | 3102807 | NUT, NYLOCK 3/8-16 LOW HT |
| 22 | 2 | 7465104 | SHROUD, MTS, SIDE 44.63" SGRY |
| 23 | 1 | 7435605 | PANEL, MTS, PLASTIC 44.63" |
| 24 | 1 | 8046901 | ASSY, MTS, INCREMENT WEIGHT |
| 25 | 1 | 3239305 | 1/2-13 X 1.25 UNS HEX FHB G5 ZN |
| 26 | 2 | 3239316 | 1/2-13 X 4.00 UNS HEX FHB G5 ZN |
| 27 | 2 | 3103301 | SHAFT COLLAR, 3/4 I.D. ZINC |
| 28 | 2 | 0017-00101-1587 | SHIELD RIVET |
| 29 | 1 | 7435701 | BELT, SPOOLED, W15/16, T.09 |
| 30 | 1 | 3239303 | 1/2-13 X .75 UNS HEX FHB G5 ZN |
| 31 | 3 | 3102507 | WASHER, TYPE A PLAIN |
| 32 | 1 | 7422003 | LABEL, MOVING PARTS |
| 33 | 1 | M051-00297-A000 | INCREMENT WT. DECAL (RIGHT) |
| 34 | 1 | M051-00289-A000 | HAMMER STRENGTH NAME PLATE |
| 35 | 1 | M051-00294-A000 | WEIGHT STACK NUMBER STRIP |
| 36 | 1 | 7488701 | LABEL, AXIS OF ROTATION |
| 37 | 1 | 7538701 | ASSY, MTLC, ARM RIGHT |
| 38 | 1 | 7538801 | ASSY, MTLC, CAM RIGHT |
| 39 | 2 | 7564101 | LABEL, MTS, .625 DIA HOLE COVER |
| 40 | 1 | 7564501 | PIN, FZ/PS, WEIGHT PLATE |
| 41 | 1 | 3243901 | RING, BRE M11, ST, PP |

# MTSLC LEG CURL
# RIGHT WORK ARM ASSEMBLY - 7538701

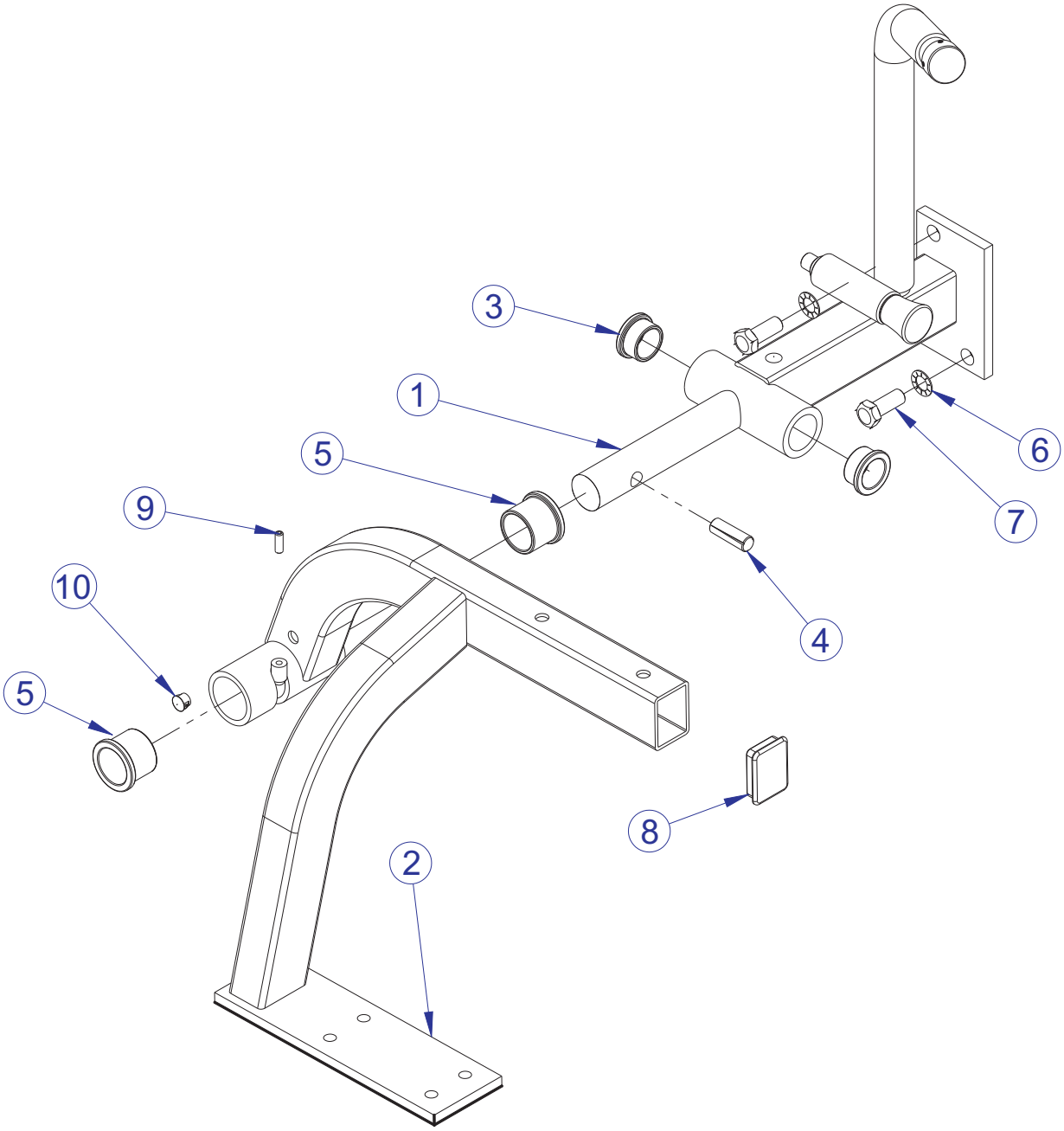


| ITEM NO. | QTY. | PART NO. | DESCRIPTION |
|---|---|---|---|
| 1 | 1 | 7960201 | ASSY, MTSLC RR ARM - RT |
| 2 | 1 | 7536501 | WLDMT, MTLC, FRONT ARM RT |
| 3 | 2 | 3104906 | 1.00" ID 1.25" OD BRONZ BUSHING |
| 4 | 1 | 3251901 | PIN, GROOVE 1/2 DIA X 1-1/2 |
| 5 | 2 | 3104907 | 1.25" ID 1.50" OD BRONZE BUSHING |
| 6 | 2 | 3239505 | WSH, .500 IN-D ST ZN |
| 7 | 2 | 3239305 | 1/2-13 X 1.25 UNS HEX FHB G5 ZN |
| 8 | 1 | 7352201 | CAP, END 1-1/2 X 2 |
| 9 | 1 | 3243705 | 1/4-20 X 12 HXS OVAL ST BO |
| 10 | 2 | 3237401 | PLUG, 7/16" HOLE |

# MTSLC LEG CURL
# RIGHT REAR ARM ASSEMBLY - 7960201

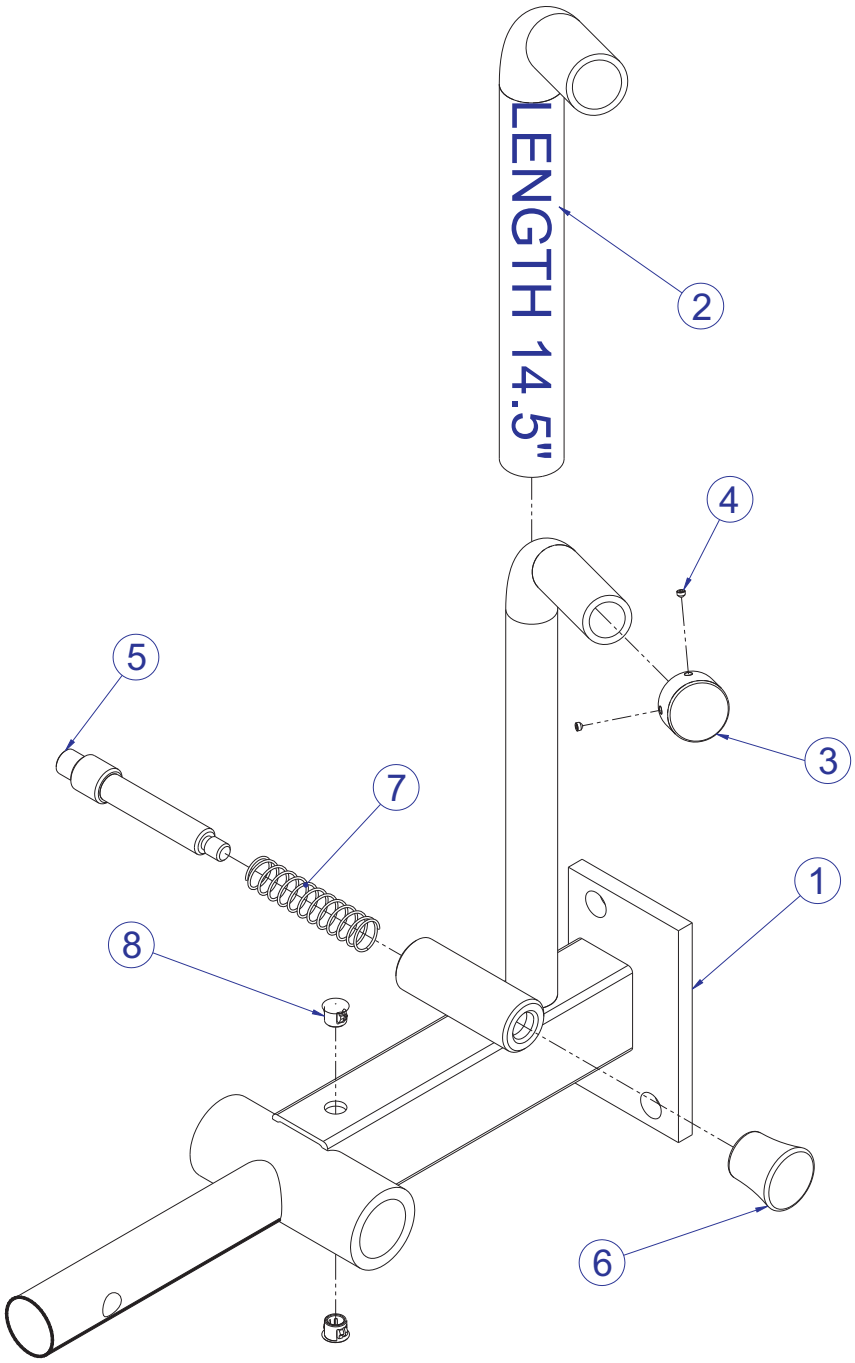


| ITEM NO. | QTY. | PART NO. | DESCRIPTION |
|---|---|---|---|
| 1 | 1 | 7536401 | WLDMT, MTLC, REAR ARM RT |
| 2 | 1 | 3235801 | GRIP, SHADOW GRAY, 15" |
| 3 | 1 | 7662901 | CAP, GRIP 1.25 OD |
| 4 | 2 | 3247701 | M4 X .7 HXS NO CUP ST BO |
| 5 | 1 | 7351301 | PIN, PULL X 4.375 |
| 6 | 1 | 7351401 | KNOB, TULIP STYLE |
| 7 | 1 | 7351501 | SPRING; PULL PIN LARGE |
| 8 | 2 | 3237401 | PLUG, 7/16" HOLE |

# MTSLC LEG CURL
# RIGHT CAM ASSEMBLY - 7538801

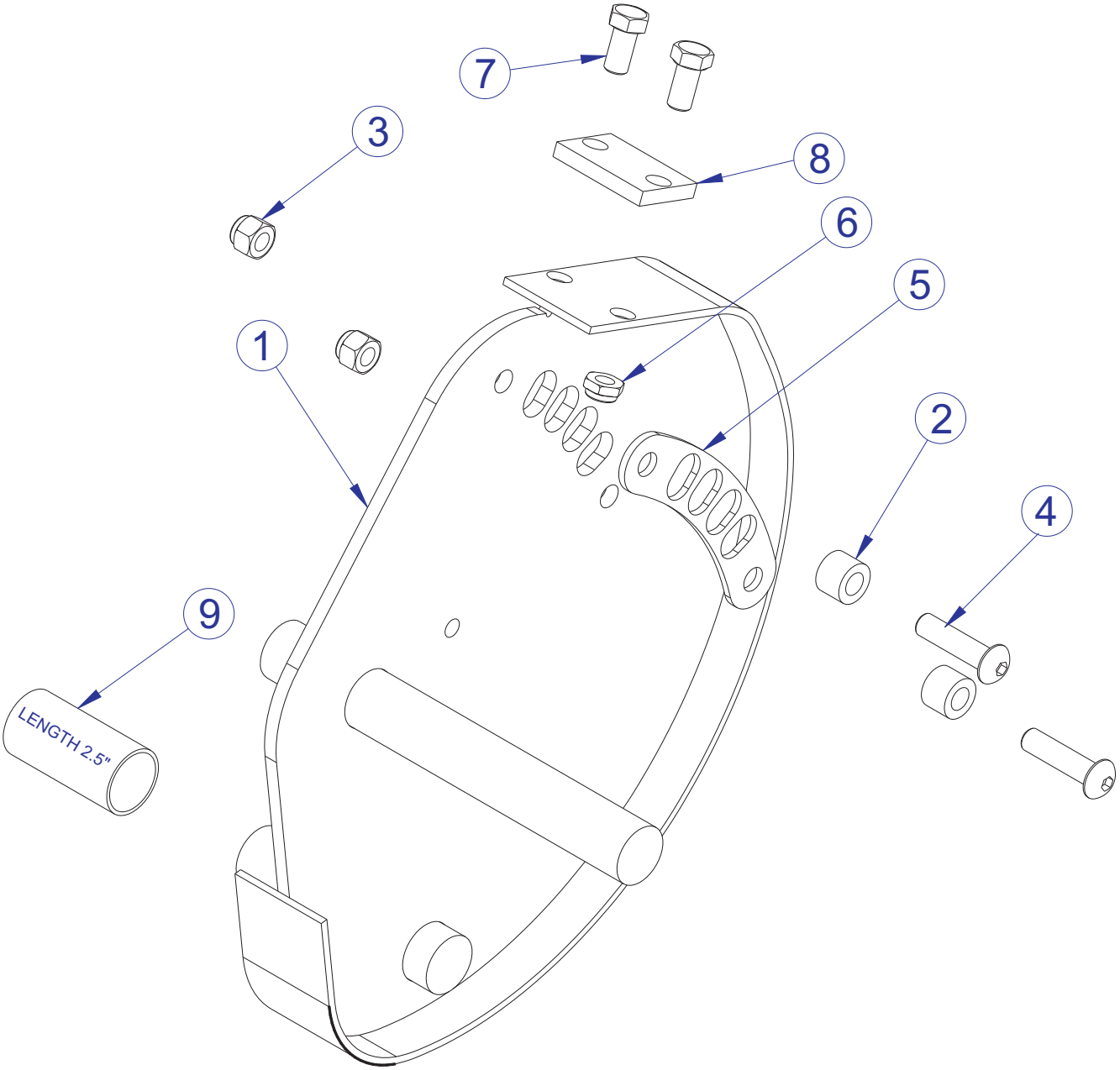


| ITEM NO. | QTY. | PART NO. | DESCRIPTION |
|---|---|---|---|
| 1 | 1 | 7536801 | WLDMT, MTLC, CAM RIGHT |
| 2 | 2 | 7559901 | SPACER, MTS, .39 ID X .69 OD X .50 |
| 3 | 2 | 3102802 | NUT, NYLOCK 3/8-16 |
| 4 | 2 | 3202409 | 3/8-16 X 1.5 BH SCREW |
| 5 | 1 | 7522201 | PLATE, MTS, SELECTOR, 4 POS |
| 6 | 2 | 3102807 | NUT, NYLOCK 3/8-16 LOW HT |
| 7 | 2 | 3239803 | 3/8-16 X 16 HEX HEAD BOLT |
| 8 | 1 | 7436695 | PLATE, MTS, BELT CAM ATTACH |
| 9 | 1 | 3235801 | GRIP, SHADOW GRAY, 2.25" |

# MTSLC LEG CURL
# REAR FRAME ASSEMBLY - 7593901

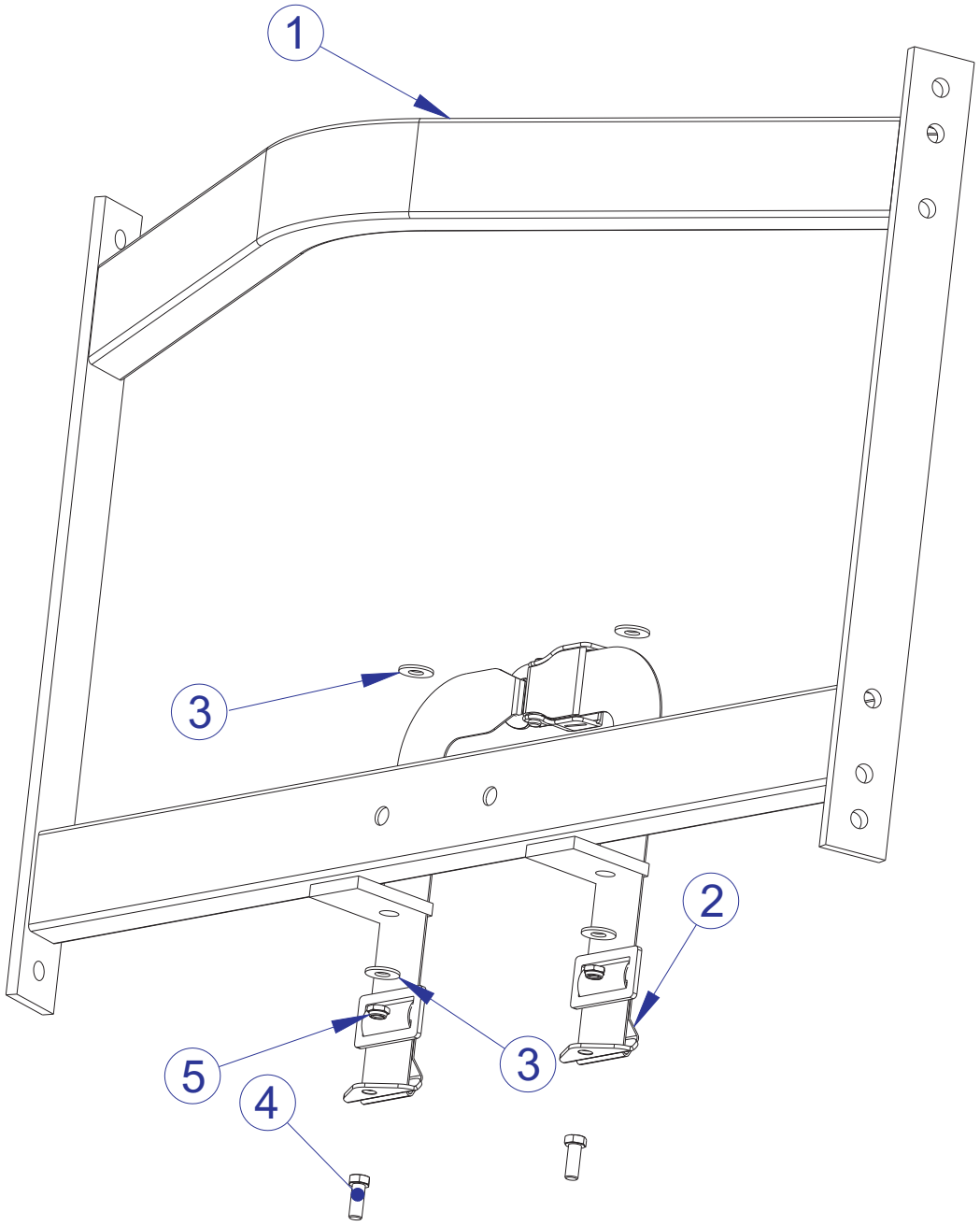


| ITEM NO. | QTY. | PART NO. | DESCRIPTION |
|---|---|---|---|
| 1 | 1 | 7537201 | WLDMT, MTLC, BACK FRAME |
| 2 | 1 | 7593701 | SEAT BELT, MTS |
| 3 | 4 | 3102501 | WASHER, TYPE A PLAIN |
| 4 | 2 | 3223301 | 3/8-16 X 1.00 HEX HEAD BOLT |
| 5 | 2 | 3102807 | NUT, NYLOCK 3/8-16 LOW HT |

# MTSLC LEG CURL
# SEAT FRAME ASSEMBLY - 7538401

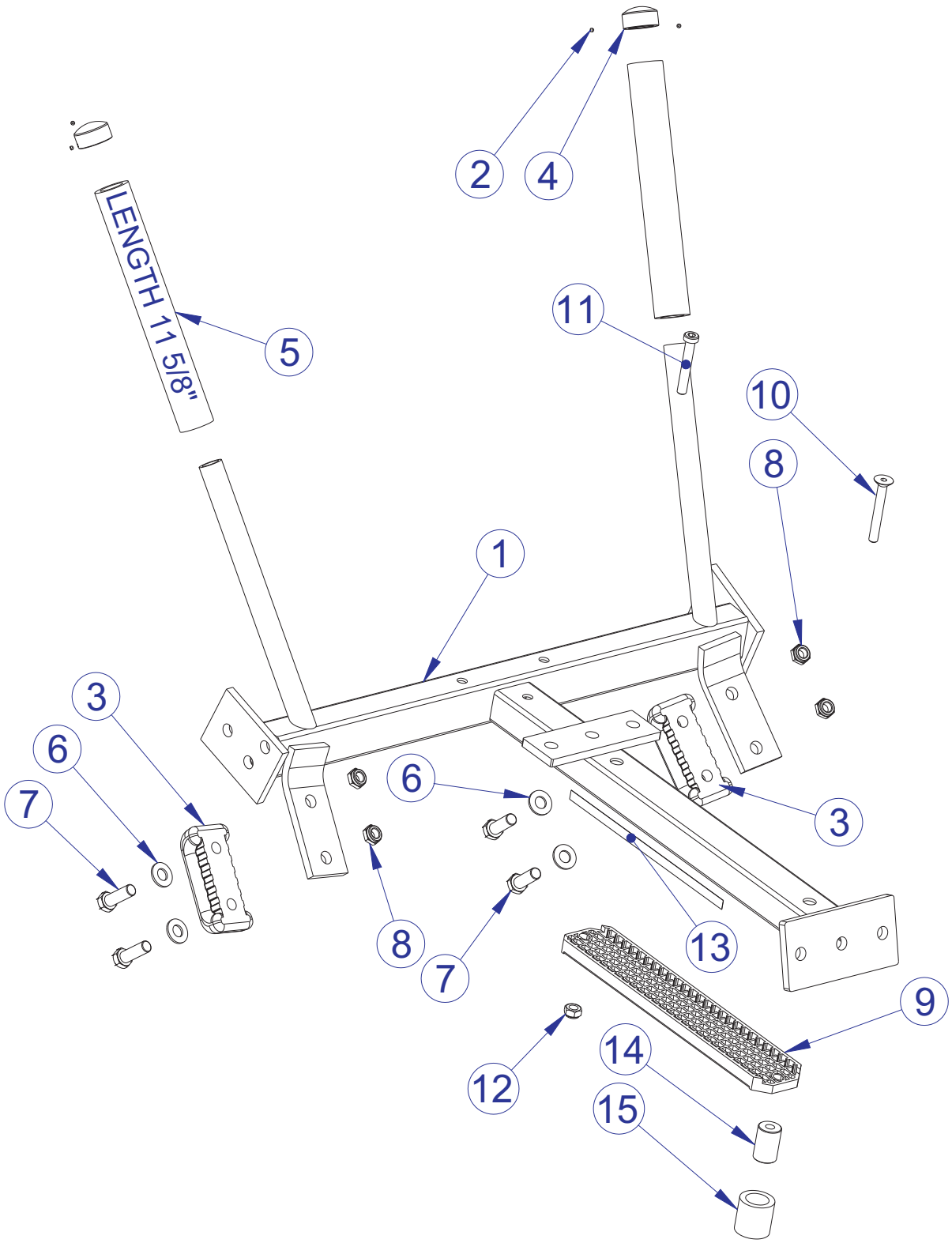


SEE PAGE 14 FOR LEGEND

# MTSLC LEG CURL
# SEAT FRAME ASSEMBLY LEGEND

| ITEM NO. | QTY. | PART NO. | DESCRIPTION |
|---|---|---|---|
| 1 | 1 | 7537701 | WLDMT, MTLC, SEAT FRAME |
| 2 | 4 | 3247701 | M4 X .7 HXS NO CUP ST BO |
| 3 | 2 | 7352001 | BUMPER, 2-1/8 X 4-5/8 |
| 4 | 2 | 7662902 | CAP, GRIP 1.50 OD |
| 5 | 2 | 3235802 | MTLC GRIP, SHADOW GRAY, 11.25" |
| 6 | 4 | 3102507 | WASHER, TYPE A PLAIN |
| 7 | 4 | 3239306 | 1/2-13 X 1.50 UNS HEX FHB G5 ZN |
| 8 | 4 | 3102804 | NUT, NYLOCK-JAM 1/2-13 ST ZN |
| 9 | 1 | 7564401 | SEATRACK, FLAT |
| 10 | 1 | 3238312 | M10x1.5x75mm |
| 11 | 1 | 3236210 | SCREW, M10 X1.5 65MM |
| 12 | 1 | 3236801 | NUT, M10 HEX NYLOCK SS |
| 13 | 1 | 7422002 | LABEL, SEAT ADJUST |
| 14 | 1 | 7570601 | STOP, ROLLER SEAT |
| 15 | 1 | 3235802 | GRIP, SHADOW GRAY, 1.5" |

# MTSLC LEG CURL
# SEAT BACK ASSEMBLY - 7522701

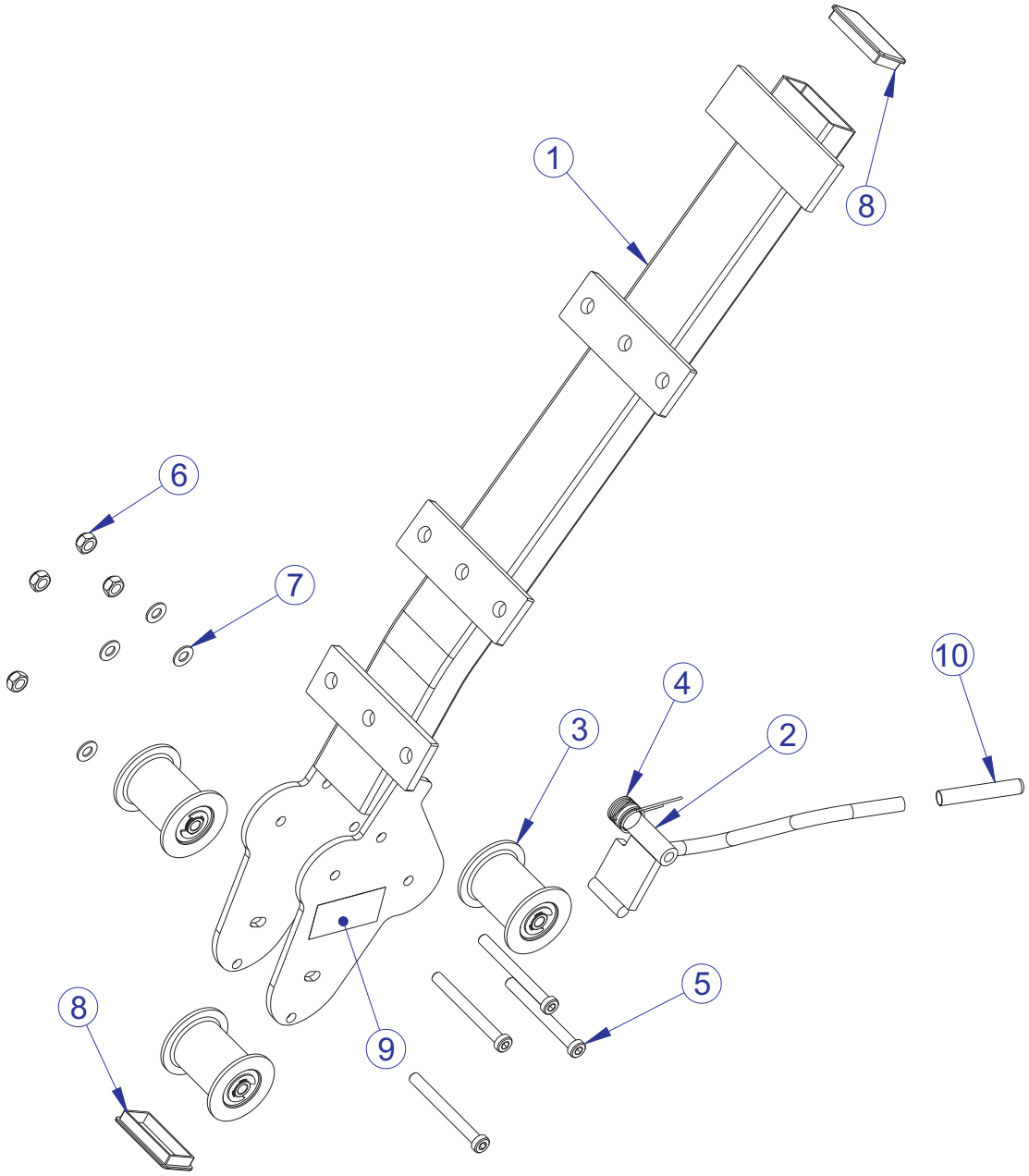


| ITEM NO. | QTY. | PART NO. | DESCRIPTION |
|---|---|---|---|
| 1 | 1 | 7520701 | WLDMT, MTS, SEAT BACK |
| 2 | 1 | 7387595 | WELDMNT, PS-ROLLER SEAT HANDLE |
| 3 | 3 | 7564201 | ASSY, SEAT ROLLER |
| 4 | 1 | 7442701 | SPRNG, PRO2 HANDLE TORSION |
| 5 | 4 | 3236217 | SCREW, M10 X1.5 100MM |
| 6 | 4 | 3236801 | NUT, M10 HEX NYLOCK SS |
| 7 | 4 | 3236601 | WASHER, 3/8 SAE SS |
| 8 | 2 | 7477401 | CAP. END, 1-1/2 X 3, 11GA SGRY |
| 9 | 1 | 7422001 | LABEL, SEAT INST |
| 10 | 1 | 3238502 | CAP, 1/2 X 3 |

# MTSLC LEG CURL
# LEFT SIDE ASSEMBLY - 7538201

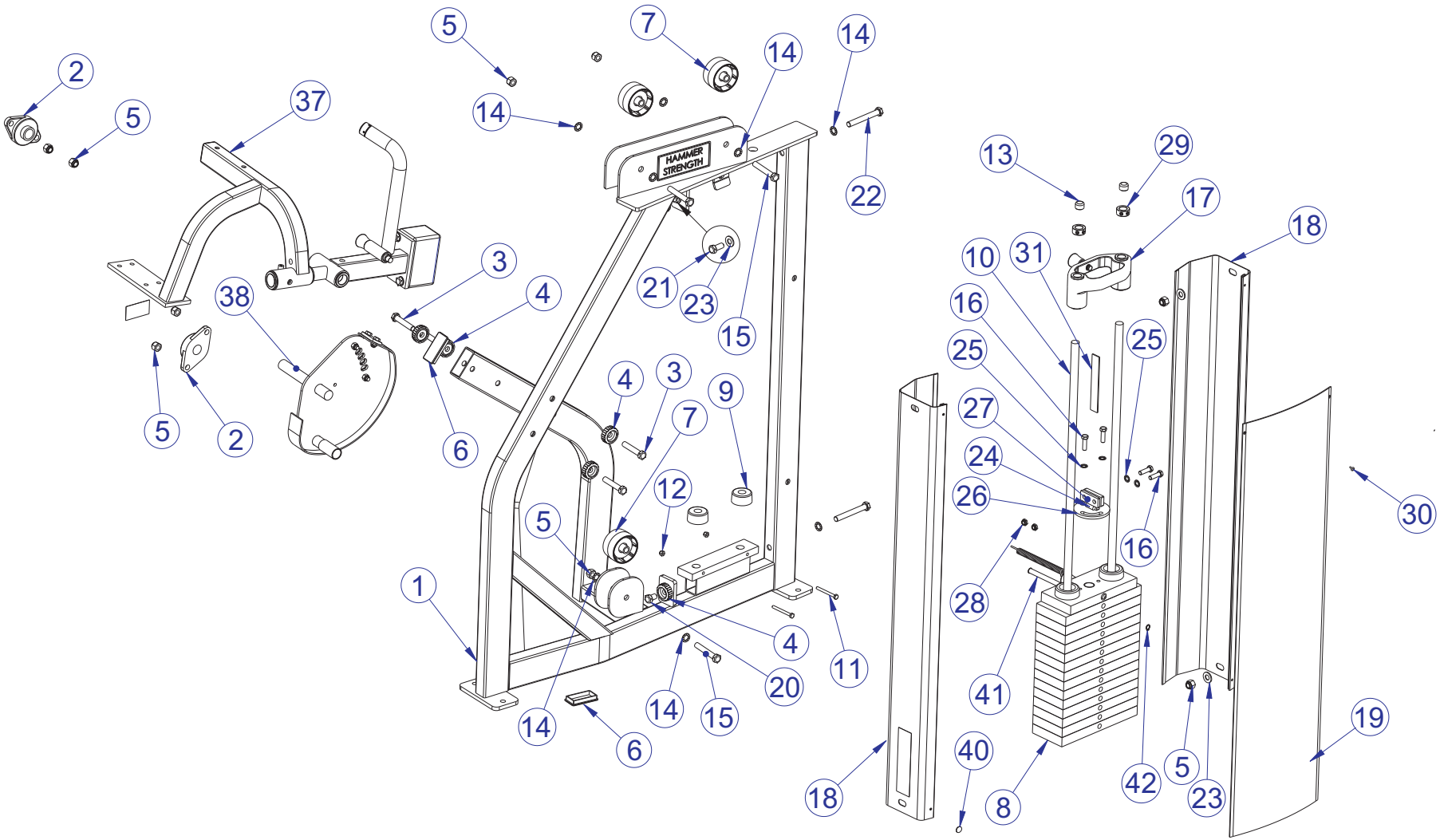


SEE PAGE 18 FOR LEGEND

# MTSLC LEG CURL
# LEFT SIDE ASSEMBLY II - 7538201

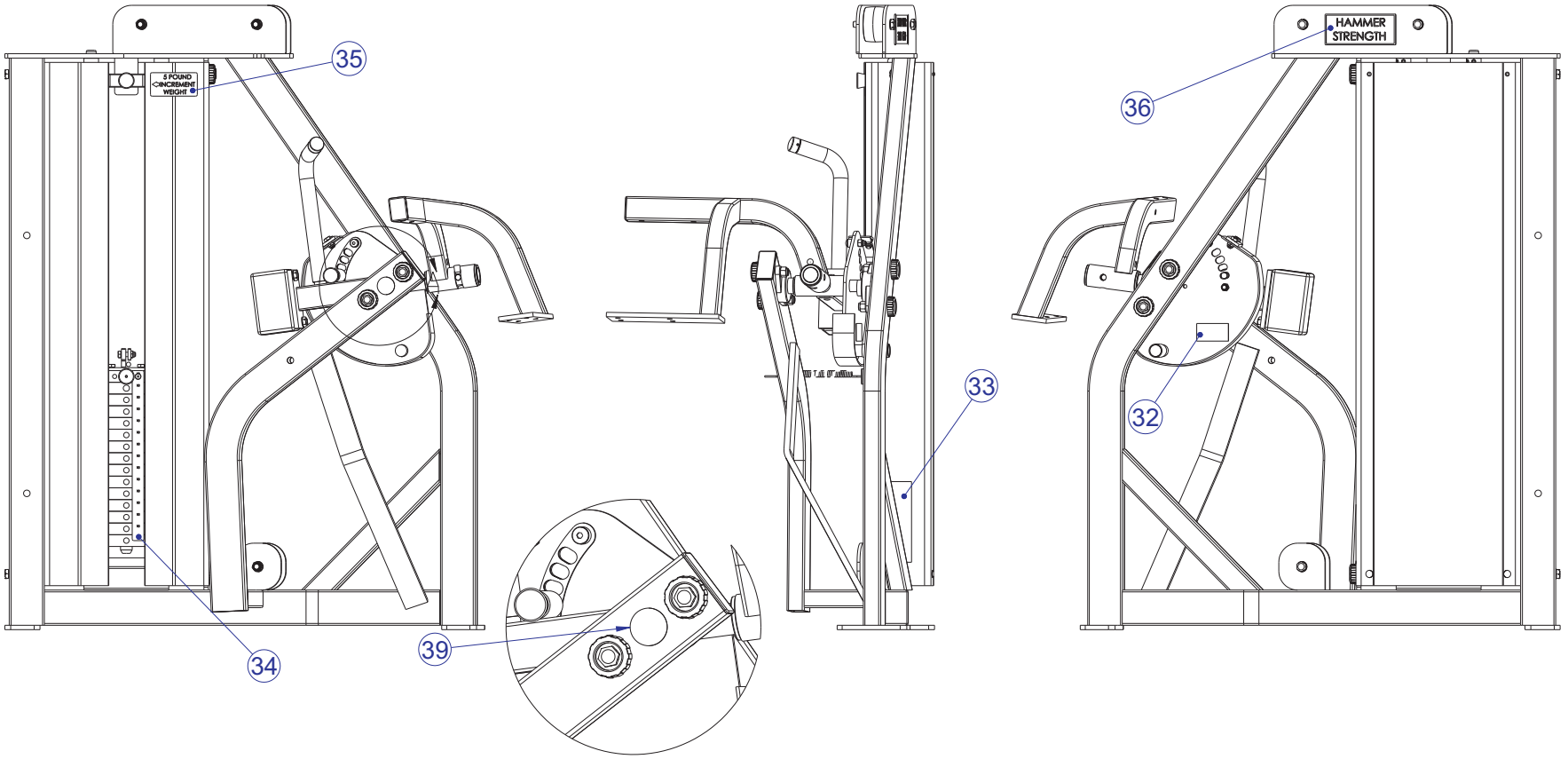


SEE PAGE 18 FOR LEGEND

# MTSLC LEG CURL
# LEFT SIDE ASSEMBLY LEGEND

| ITEM NO. | QTY. | PART NO. | DESCRIPTION |
|---|---|---|---|
| 1 | 1 | 7535101 | WLDMT, MTLC, LEFT SIDE |
| 2 | 2 | 3239901 | BEARING, 2 HOLE FLANGE, 1" ID |
| 3 | 4 | 3239311 | 1/2-13 X 2.75 UNS HEX FHB G5 ZN |
| 4 | 6 | 7434001 | WASHER, MTS, HAMMER HEAD |
| 5 | 9 | 3102801 | NUT, NYLOCK 1/2-13 ST ZN |
| 6 | 2 | 7477401 | CAP. END, 1-1/2 X 3, 11GA SGRY |
| 7 | 3 | 7594601 | PULLEY, MTS, 3" BELT |
| 8 | 1 | 7464701 | ASSY, MTS, 150 LB STACK |
| 9 | 2 | 7352101 | CUSHION, WEIGHT STACK |
| 10 | 2 | 7328613 | GUIDE ROD, .75 OD SOLID 43.25 |
| 11 | 2 | 3223809 | 1/4-20 UNS HEX FHB G5 ZN |
| 12 | 2 | 3102806 | NUT, NYLOCK 1/4-20 ZN |
| 13 | 2 | 3242701 | CAP, END, .75 X .50. RD, BLACK |
| 14 | 8 | 3239505 | WSH, .500 IN-D ST ZN |
| 15 | 3 | 3239313 | 1/2-13 X 3.25 UNS HEX FHB G5 ZN |
| 16 | 4 | 3223302 | 3/8-16 X 1.25 HEX HEAD BOLT |
| 17 | 1 | 8046901 | ASSY, MTS, INCREMENT WEIGHT |
| 18 | 2 | 7465104 | SHROUD, MTS, SIDE 44.63" SGRY |
| 19 | 1 | 7435605 | PANEL, MTS, PLASTIC 44.63" |
| 20 | 1 | 3239303 | 1/2-13 X .75 UNS HEX FHB G5 ZN |
| 21 | 1 | 3239305 | 1/2-13 X 1.25 UNS HEX FHB G5 ZN |
| 22 | 2 | 3239316 | 1/2-13 X 4.00 UNS HEX FHB G5 ZN |
| 23 | 3 | 3102507 | WASHER, TYPE A PLAIN |
| 24 | 1 | 7435101 | SHAFT, 3/8" DIA SS, BELT WRAP |
| 25 | 4 | 3239503 | WSH, .375 IN-D ST ZN |
| 26 | 1 | 7434895 | WLDMT, MTS, BELT ATTACH |
| 27 | 1 | 7435295 | PLATE, MTS, BELT CLAMP |
| 28 | 2 | 3102807 | NUT, NYLOCK 3/8-16 LOW HT |
| 29 | 2 | 3103301 | SHAFT COLLAR, 3/4 I.D. ZINC |
| 30 | 2 | 0017-00101-1587 | SHIELD RIVET |
| 31 | 1 | 7435701 | BELT, SPOOLED, W15/16, T.09 |
| 32 | 1 | 7422003 | LABEL, MOVING PARTS |
| 33 | 1 | 7422004 | LABEL, 2" ASTM WARN |
| 34 | 1 | M051-00294-A000 | WEIGHT STACK NUMBER STRIP |
| 35 | 1 | M051-00298-A000 | INCREMENT WT. DECAL (LEFT) |
| 36 | 1 | M051-00289-A000 | HAMMER STRENGTH NAME PLATE |
| 37 | 1 | 7538501 | ASSY, MTLC, ARM LEFT |
| 38 | 1 | 7538601 | ASSY, MTLC, CAM LEFT |
| 39 | 1 | 7488701 | LABEL, AXIS OF ROTATION |
| 40 | 2 | 7564101 | LABEL, MTS, .625 DIA HOLE COVER |
| 41 | 1 | 7564501 | PIN, FZ/PS, WEIGHT PLATE |
| 42 | 1 | 3243901 | RING, BRE M11, ST, PP |

# MTSLC LEG CURL
# LEFT WORK ARM ASSEMBLY - 7538501

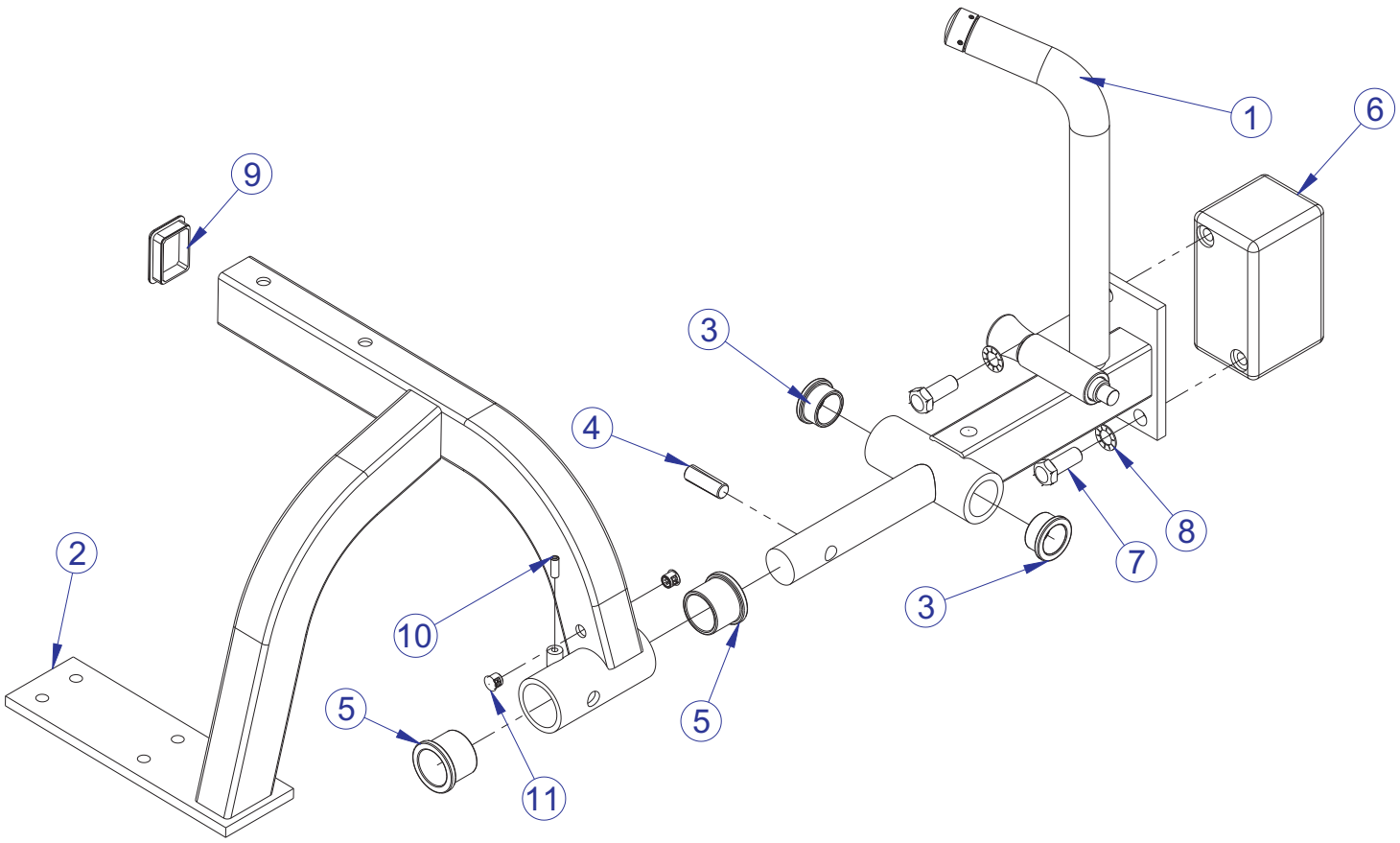


| ITEM NO. | QTY. | PART NO. | DESCRIPTION |
|---|---|---|---|
| 1 | 1 | 7960301 | ASSY, MTSLC RR ARM - LT |
| 2 | 1 | 7535601 | WLDMT, MTLC, FRONT ARM LEFT |
| 3 | 2 | 3104906 | 1.00" ID 1.25" OD BRONZ BUSHING |
| 4 | 1 | 3251901 | PIN, GROOVE 1/2 DIA X 1-1/2 |
| 5 | 2 | 3104907 | 1.25" ID 1.50" OD BRONZE BUSHING |
| 6 | 1 | 7802201 | COUNTER WEIGHT, MTLE |
| 7 | 2 | 3239305 | 1/2-13 X 1.25 UNS HEX FHB G5 ZN |
| 8 | 2 | 3239505 | WSH, .500 IN-D ST ZN |
| 9 | 1 | 7352201 | CAP, END 1-1/2 X 2 |
| 10 | 1 | 3243705 | 1/4-20 X 12 HXS OVAL ST BO |
| 11 | 2 | 3237401 | PLUG, 7/16" HOLE |

# MTSLC LEG CURL
# LEFT REAR ARM ASSEMBLY - 7960301

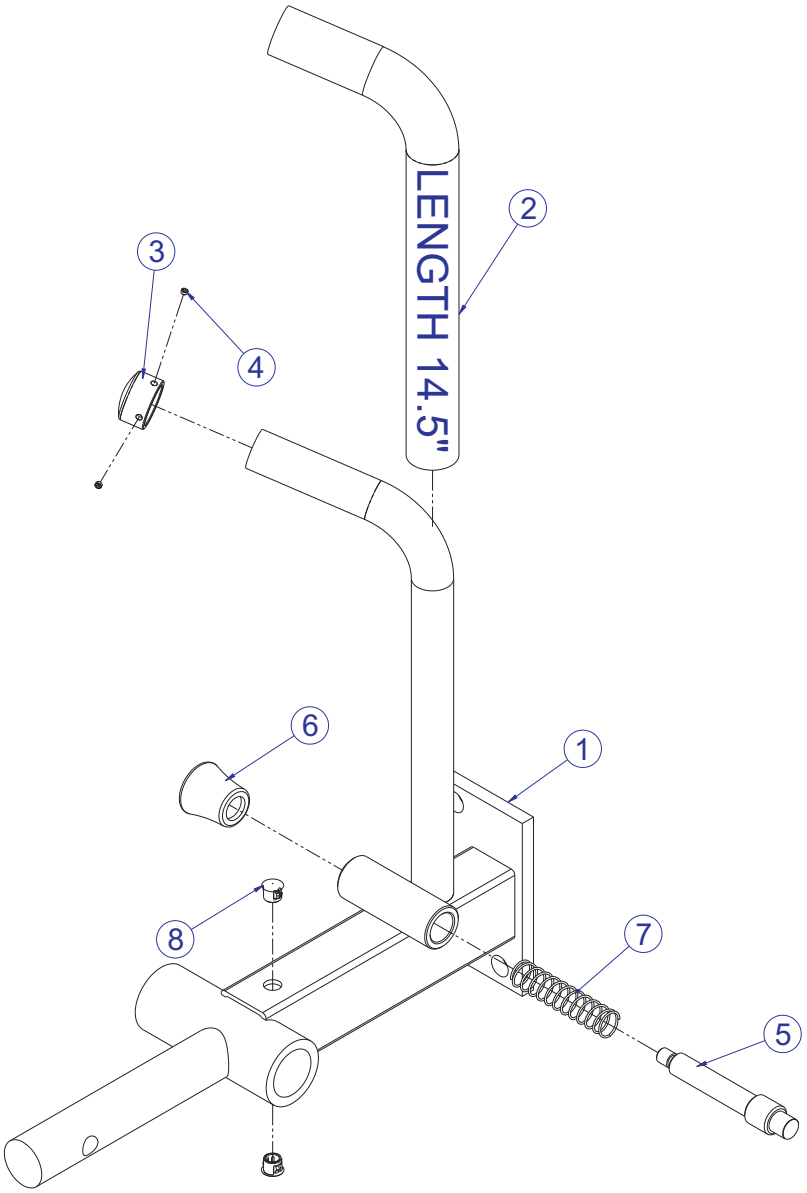


| ITEM NO. | QTY. | PART NO. | DESCRIPTION |
|---|---|---|---|
| 1 | 1 | 7535201 | WLDMT, MTLC, REAR ARM LEFT |
| 2 | 1 | 3235801 | GRIP, SHADOW GRAY, 15" |
| 3 | 1 | 7662901 | CAP, GRIP 1.25 OD |
| 4 | 2 | 3247701 | M4 X .7 HXS NO CUP ST BO |
| 5 | 1 | 7351301 | PIN, PULL |
| 6 | 1 | 7351401 | KNOB, TULIP STYLE |
| 7 | 1 | 7351501 | SPRING, PULL PIN LARGE |
| 8 | 2 | 3237401 | PLUG, 7/16" HOLE |

# MTSLC LEG CURL
# LEFT CAM ASSEMBLY - 7538601

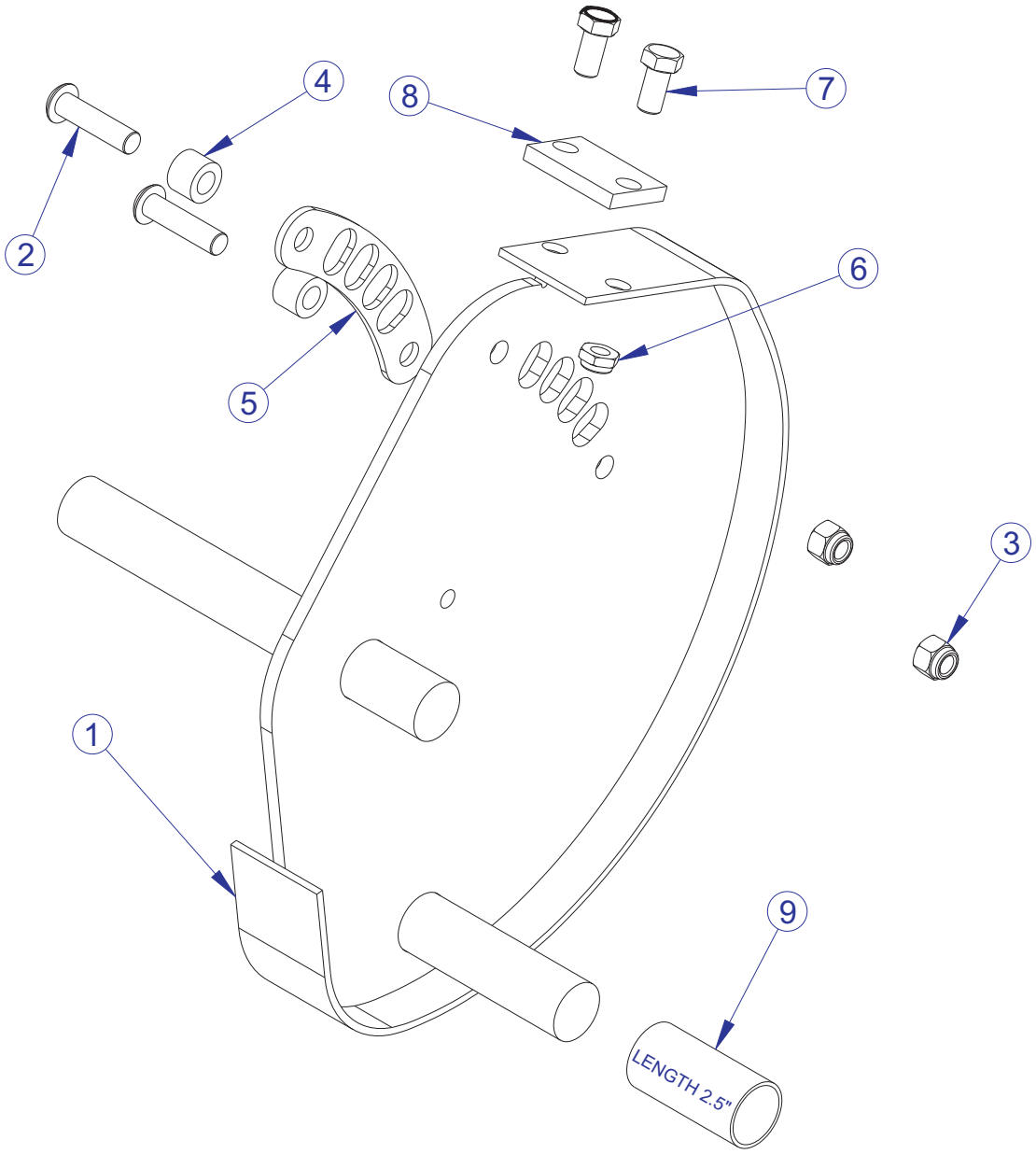


| ITEM NO. | QTY. | PART NO. | DESCRIPTION |
|---|---|---|---|
| 1 | 1 | 7537101 | WLDMT, MTLC, CAM LEFT |
| 2 | 2 | 3202409 | 3/8-16 X 1.5 BH SCREW |
| 3 | 2 | 3102802 | NUT, NYLOCK 3/8-16 |
| 4 | 2 | 7559901 | SPACER, MTS, .39 ID X .69 OD X .50 |
| 5 | 1 | 7522201 | PLATE, MTS, SELECTOR, 4 POS |
| 6 | 2 | 3102807 | NUT, NYLOCK 3/8-16 LOW HT |
| 7 | 2 | 3239803 | 3/8-16 X 16 HEX HEAD BOLT |
| 8 | 1 | 7436695 | PLATE, MTS, BELT CAM ATTACH |
| 9 | 1 | 3235801 | GRIP, SHADOW GRAY, 2.25" |

# MTSLC LEG CURL
# 150 LBS. WEIGHT STACK ASSEMBLY - 7464701

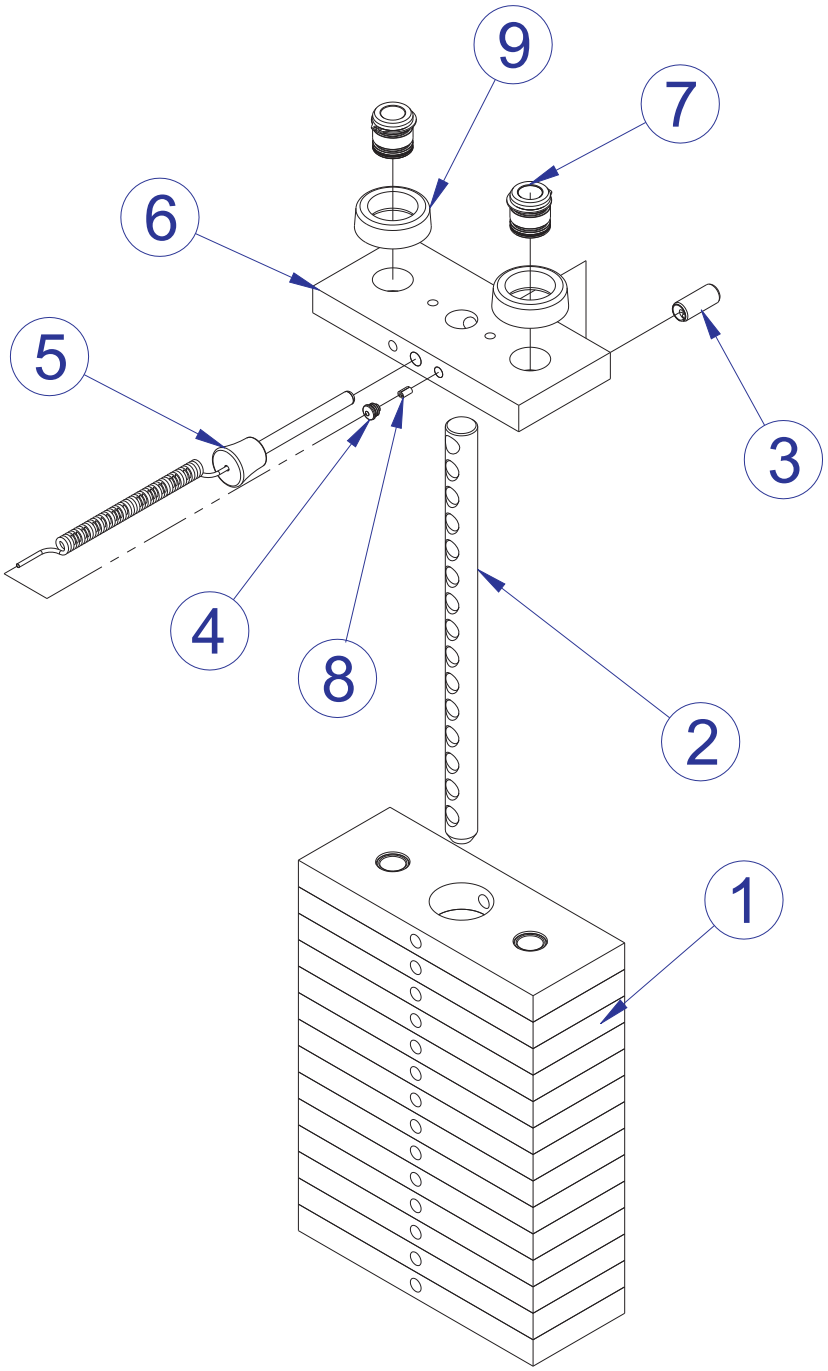


| ITEM NO. | QTY. | PART NO. | DESCRIPTION |
|---|---|---|---|
| 1 | 14 | 7353701 | ASSY, 10 LB PLATE |
| 2 | 1 | 7464801 | BAYONET, MTS, 15 HOLE |
| 3 | 1 | 3236001 | BUSHING, SPRING PIN |
| 4 | 1 | 7356501 | PLUG, LANYARD ATTACHMENT |
| 5 | 1 | 7353001 | ASSY, SELECTOR PIN |
| 6 | 1 | 7434401 | HEAD PLATE, MTS |
| 7 | 2 | 7338001 | BUSHING, HEADPLATE |
| 8 | 1 | 7523601 | CRIMP, CABLE |
| 9 | 2 | 7767601 | BUMPER, PS INCREMENT WT |

# MTSLC LEG CURL
# INCREMENT WEIGHT ASSEMBLY - 7459901

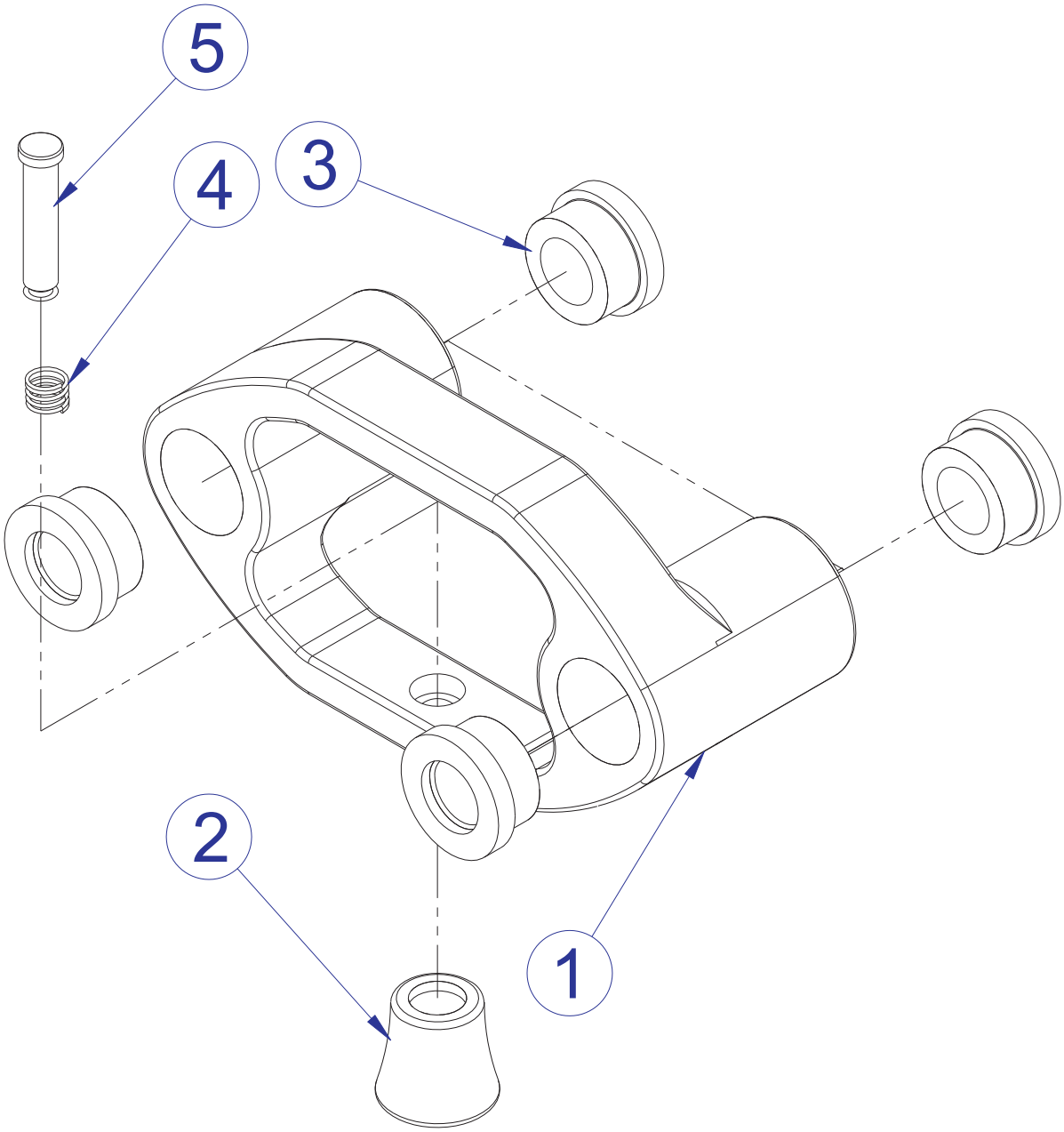


| ITEM NO. | QTY. | PART NO. | DESCRIPTION |
|---|---|---|---|
| 1 | 1 | 7459801 | BLOCK, MTS, INCREMENT WEIGHT |
| 2 | 1 | 7351401 | KNOB, TULIP STYLE |
| 3 | 4 | 7560001 | BUSHING, MTS, INC WEIGHT |
| 4 | 1 | 7447001 | SPRING, COMPRESSION |
| 5 | 1 | 7446901 | PIN, RETAINING |

# MTSLC LEG CURL IMAGE

